ROTAREX
EQUIPMENT

FLOWTEKNIK
SCANDINAVIA APS

ULTRA HIGH PURITY VALVES AND REGULATORS

TABLE OF CONTENTS

VALVES P.004
- M4SI P.004
- M8SI P.006
- M8.1 P.008
- M12 P.010
- M20 P.012

REGULATORS P.014
- SIR 100 P.014
- SIR 200 P.016
- SI 220 P.018
- SI 240 P.020

OTHERS PRODUCTS ON REQUEST P.022
- Valves P.022
- Regulators P.022

M4-SI | SPRINGLESS DIAPHRAGM VALVES FOR UHP APPLICATIONS

Feature a unique proven design

KEY FEATURES

- Spring-less
- Metal/Metal Tightness to the atmosphere
- Ultra High Purity Cleaning
- High cycling
- Individual serial number, for traceability
- Compact size (70,6 mm)
- Electropolishing of all internal surfaces
- Integral He leak testing
- Stainless Steels 316L / VAR / Hastelloy® (on request)
- Assembling, testing & packaging in cleanroom
- Visual Open/Close Indicator on manual valves
- Fully functional from vacuum to rated pressure
- Excellent purgeability
- Multiporting options
- 2 bottoms fixations

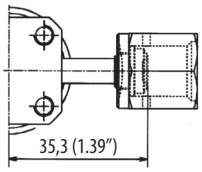

Female (face seal)
Swivel

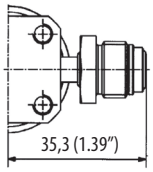

Male (face seal)
Swivel

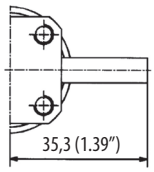

Standard
welding heads

M4SI 3V2-LPNO

M4SI - HPNF

M4SI - LPNF

DIMENSIONS

M4-SI MULTITURN VALVE (MT) WITH OPEN/CLOSE WINDOW

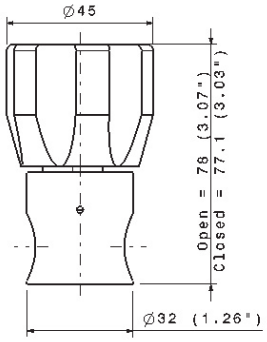

M4-SI PNEUMATIC VALVE MEDIUM PRESSURE (LPNF, LPNO)

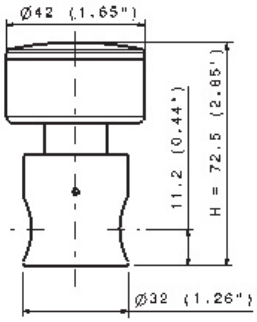

20 bar - 290 psi

M4-SI PNEUMATIC VALVE LOW PRESSURE (BPNF)

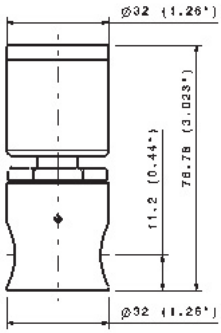

10 bar - 145 psi

M4-SI PNEUMATIC VALVE HIGH PRESSURE (HPNF, HPNO)

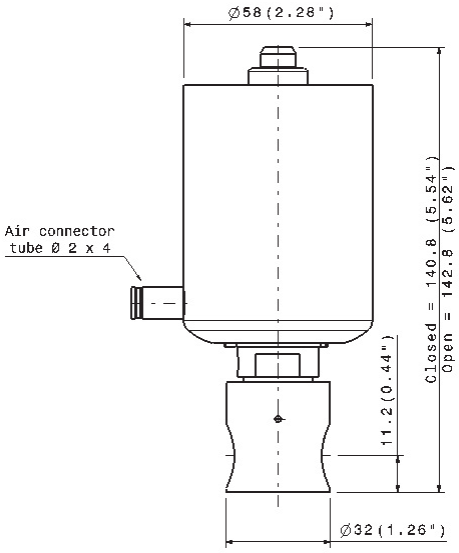

240 bar - 3500 psi

ALL RIGHTS OF CHANGE RESERVED

SPECIFICATIONS

Fluid Media	Standard, High or ultra high purity corrosive and non-corrosive gases
Max. working pressure	• **M4-SI manual multiturn MT:** 3500psi (240 bar) or 290psi (20 bar) • **M4-SI ¼ turn QT** 290psi (20bar) • **M4-SI pneumatic BPNF** 145psi (10 bar) • **M4-SI pneumatic LPNF-LPNO** 290psi (20bar) • **M4-SI pneumatic HPNF-HPNO** 3500 psi (240bar)
Pneumatic actuator opening pressure	5 - 7 bar (75 - 105 psi)
Temperature range	-20°C to + 65°C: PCTFE Vespel® option PVDF option
Burst pressure	12,500 psi (850 bar)
Flow Capacity	Cv = 0.2
Certified max. Helium inboard leak rate	< 1.10^{-9} mbar.l/sec
Certified max. Helium outboard leak rate (at max. pressure)	< 1.10^{-9} mbar.l/sec
Certified max. Helium across the seat (at max. pressure)	< 1.10^{-9} mbar.l/sec
Wetted volume	< 1.2 cm^3
Mounting	Back mounting or optional Panel mounting
Nominal seat Diameter	4 mm (0,16")

CONSTRUCTION MATERIAL

		Valve Grade & Materials		
	Parts	**M4-SI S**	**M4-SI V**	**M4-SI U**
Wetted parts	Body	SS 316L / SS VAR / Hastelloy®		
	Surface Finish	< 0,4 µm non EP (15 µ in Ra)	< 0,25 µm EP (10 µ in Ra)	< 0,18 µm EP (7 µ in Ra)
	Diaphragm	Elgiloy®		
	Seat Material	Kel-F® (PVDF or Vespel® on request)		
Non-wetted parts	Backup diaphragms	UNS R30003 (Phynox)®		
	All others	Stainless steel or alloys		

MANUAL ACTUATION

Parts for all valve grades	
Upper spindle	Brass
Handle	Aluminium
All others	Stainless Steel

PNEUMATIC ACTUATION

Parts	
Actuator Body	Aluminium / SS
Piston	Brass / AL / SS
O-ring	NBR - PC 851
All others	Stainless Steel

PRODUCT CONFIGURATOR

	Valve series, Surface Finish & Body material		Valve Actuation		Valve Configurations		Body material		Seat Material		End Connection		Options	
M4SI	**S**		**LM**		**2V1**		**I**		**K**		**A/B: B¼**			
	Ra 0.25 µm EP (10 µin Ra)	**V**	Multi-Turn Handwheel (20bar)	**LM**	2 ports in line	**2V1**	SS VAR	**A**	PCTFE (Kel-F®)	**K**	Metal face seal ¼" - Female	**V¼-F**	Panel Mounting	**FT**
	Ra 0.4 µm (15 µin Ra)	**S**	Multi-Turn Handwheel (240bar)	**HM**	3 ports inline	**3V1**	SS 316 L	**I**	PI (Vespel®)	**V**	Metal face seal ¼" - Male	**V¼-M**	Electric limit switch	**CI**
	Ra 0,18 µm EP (7 µin Ra)	**U**	Pneumatically actuated (10bar)	**BPNC**	4 ports inline	**4V1**	Hastelloy®	**H**	PVDF	**P**	BWO ¼" (Butt Orbital Weld)	**B¼**		
			Pneumatically actuated (20bar)	**LPNC**							Others on request			
			Pneumatically actuated (240bar)	**HPNC**										
			Quarter-Turn Handwheel (20bar)	**LQ**										

ALL RIGHTS OF CHANGE RESERVED

M8.1 | SPRINGLESS DIAPHRAGM VALVES FOR UHP APPLICATIONS

Feature a unique proven design

M8.1 HPNC

KEY FEATURES

- Spring-less
- Metal/Metal Tightness to the atmosphere
- Ultra High Purity Cleaning
- High cycling
- Individual serial number, for traceability
- Compact size (70,6 mm)
- Electropolishing of all internal surfaces
- Integral He leak testing
- Stainless Steels 316L / VAR / Hastelloy® (on request)
- Assembling, testing & packaging in cleanroom
- Visual Open/Close Indicator on manual valves
- Fully functional from vacuum to rated pressure
- Excellent purgeability
- Multiporting options
- 2 bottoms fixations
- Laser welded diaphragm for maximum reliability
- Replaceable seat

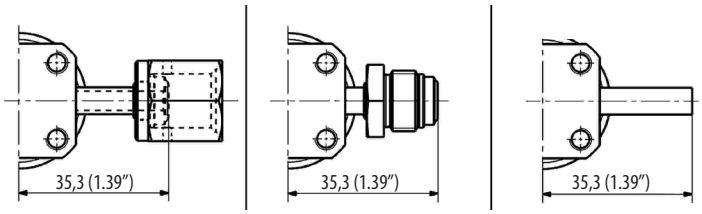

Face seal - Female ⅜"

Face seal - Male ⅜"

BWO for micro-welding head ½" or ⅜"

DIMENSIONS

M8.1- PNEUMATIC VALVE LOW PRESSURE

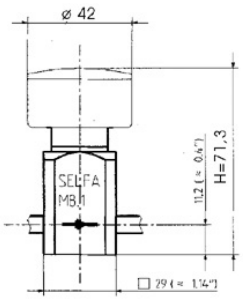

M8.1- HIGH PRESSURE PNEUMATIC VALVE

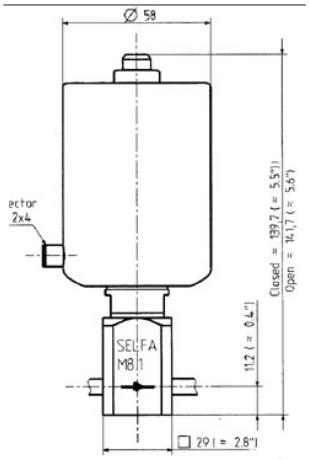

M8.1 QUARTER TURN (QT) VALVE

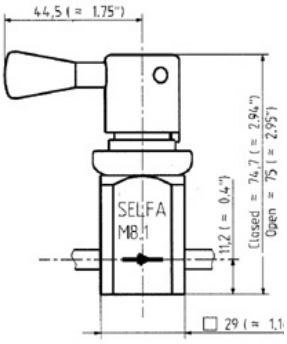

M8.1 MULTI TURN VALVE (MT) WITH ON/OFF WINDOW

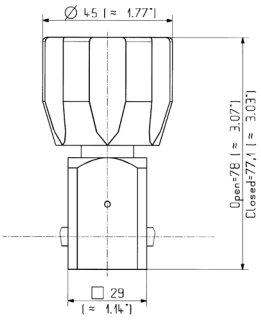

M8.1 BOTTOM VIEW

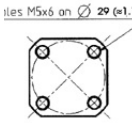

ALL RIGHTS OF CHANGE RESERVED

SPECIFICATIONS

Fluid Media	Standard, High and Ultra High Purity, corrosive and non-corrosive gases
Max. working pressure	• **M8.1 Manual:** vacuum to 240 bar (3500 psi) • **M8.1 Pneumatic** **- Low Pressure:** 17 bar (250 psi) **- High Pressure:** 240 bar (3500 psi)
Pneumatic actuator operating pressure	5 - 7 bar (75 - 105 psi)

Temperature range	-20°C to + 65°C (-2°F to 149°F)
Burst Pressure	850 bar (12,500 PSI)
Flow Capacity (Cv)	M8.1 Manual: Cv = 0.53 M8.1 Pneumatic: Cv = 0.53
Certified max. Helium inboard leak rate	< 1.10^{-9} mbar.l/sec
Certified max. Helium outboard leak rate (at max. pressure)	< 1.10^{-9} mbar.l/sec

Certified max. Helium across the seat leak rate (at max. pressure)	< 1.10^{-9} mbar.l/sec
Wetted volume	< 1.6 cc
Mounting	Front or back mounting
Nominal seat Diameter	8 mm (0,32")

CONSTRUCTION MATERIAL

		Valve Grade & Materials		
	Parts	**M8.1 S**	**M8.1 V**	**M8.1 U**
Wetted parts	Body	SS 316L / SS VAR / Hatelloy®		
	Surface Finish	< 0,4 µm non EP (15 µ in Ra)	< 0,25 µm EP (10 µ in Ra)	< 0,18 µm EP (7 µ in Ra)
	Diaphragm	Hastelloy®		
	Seat Material	Kel-F® (Vespel®, PVDF, metal on request)		
Non-wetted parts	Backup diaphragm	Phynox®		
	All others	Stainless steel or alloys		

MANUAL ACTUATION

Parts for all valve grades	
Upper spindle	Brass
Handle	Aluminum or Extruded Plastic
All others	Stainless Steel or Alloys

PNEUMATIC ACTUATION

Parts	
Actuator Body	SS 316L / Aluminum
Piston	SS / Aluminum / Brass
O-ring	NBR
All others	Stainless Steel or Alloys

PRODUCT CONFIGURATOR

	Valve series & Surface Finish		Valve Actuation (Standard: Normally closed)		Valve Configurations		Body Material (others on request)		Seat Material		End Connection		Options	
M8.1	**S**		**MT**		**2V1**		**I**		**K**		**A/B: B⅜**		**FT**	
	Ra 0,4µm non EP (15 µin Ra)	**S**	Manually actuated - Quarter Turn	**QT**	2 ports in line	**2V1**	AISI 316L	**I**	PCTFE (Kel-F®)	**K**	Metal face seal ⅜ - Female	**V ⅜-F**	Panel mounting	**FT**
	Ra 0,25µm EP (10 µin Ra)	**V**	Manually actuated - Multi Turn	**MT**	3 ports inline	**3V1**	Hastelloy®	**H**	PI (Vespel®)	**V**	Metal face seal ⅜ - Male	**V⅜-M**	Back mounting	**FB**
	Ra 0,18 µm EP (7 µin Ra)	**U**	Pneumatically actuated - Low Pressure	**LP**	4 ports inline	**4V1**	SS VAR	**A**	PVDF	**P**	BWO ⅜" - Standard (Orbital Weld)	**B ⅜**	Electric limit switch (LP actuators only)	**CI**
			Pneumatically actuated - High Pressure	**HP**					Metal	**M**	BWO ½" - (Orbital Weld)	**B ½**		
			* Add - NO - for Normally Open version) (Add - NC - for normally close version)								BWO 10 mm (Orbital Weld)	**B 10**		
											BWO 12 mm (Orbital Weld)	**B 12**		
											Others on request			

ALL RIGHTS OF CHANGE RESERVED

M8SI | DN8 DIAPHRAGM VALVE FOR UHP APPLICATIONS

Feature a unique proven design

KEY FEATURES

- Spring-less
- Metal/Metal Tightness to the atmosphere
- Ultra High Purity Cleaning
- High cycling
- Individual serial number, for traceability
- Compact size (70,6 mm)
- Electropolishing of all internal surfaces
- Integral He leak testing
- Stainless Steels 316L / VAR / Hastelloy® (on request)
- Assembling, testing & packaging in cleanroom
- Visual Open/Close Indicator on manual valves
- Fully functional from vacuum to rated pressure
- Excellent purgeability
- Multiporting options
- 2 bottoms fixations ns

DIMENSIONS

QUARTERTURN LQ

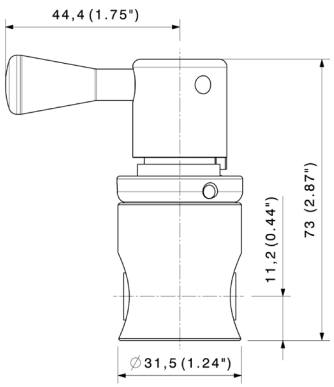

MULTITURN LM

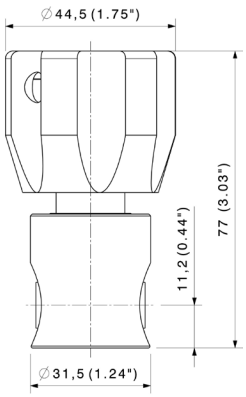

PNEUMATIC BP

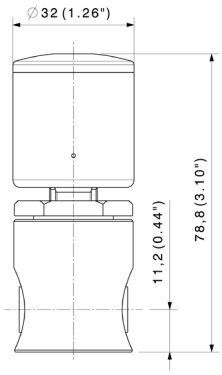

QUARTERTURN LQS

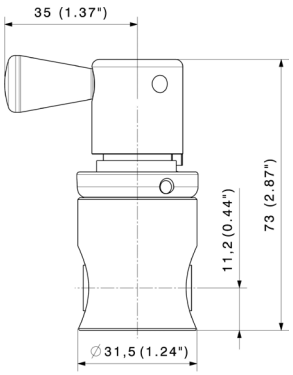

QUARTERTURN LQ, OPTION FT

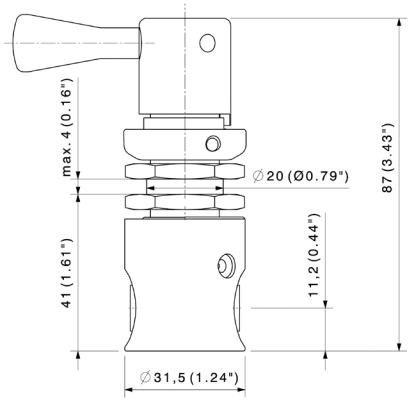

ALL RIGHTS OF CHANGE RESERVED

SPECIFICATIONS

Fluid Media	Standard, UHP, corrosive and non-corrosive gases
Max. working pressure	• **M8-SI manual multiturn LM:** 290psi (20 bar) • **M8-SI manual quarter turn LQ:** 290psi (20 bar) • **M8-SI BPNF - BPNO:** 140psi (10 bar)
Pneumatic actuator opening pressure	5 - 7 bar (75 - 105 psi)
Temperature range	-20°C to + 65°C PCTFE (-4°F to 149°F) standard
Burst pressure	6.500 psi (450 bar)
Flow Capacity	Cv = 0,5
Certified max. Helium inboard leak rate	< 1.10^{-9} mbar.l/sec
Certified max. Helium outboard leak rate (at max. pressure)	< 1.10^{-9} mbar.l/sec
Certified max. Helium across the seat (at max. pressure)	< 1.10^{-9} mbar.l/sec
Wetted volume	< 1.6 cm^3
Mounting	Back mounting or optional Panel mounting
Nominal seat Diameter	8 mm (0,32")

CONSTRUCTION MATERIAL

		Valve Grade & Materials		
	Parts	**M8-SI S**	**M8-SI V**	**M8-SI U**
Wetted parts	Body	SS 316L / SS VAR / Hatelloy®		
	Surface Finish	< 0,4 µm non EP (15 µ in Ra)	< 0,25 µm EP (10 µ in Ra)	< 0,18 µm EP (7 µ in Ra)
	Diaphragm	Phynox®		
	Seat Material	Kel-F®		
Non-wetted parts	Backup diaphragms	UNS R30003 (Phynox)®		
	All others	Stainless steel or alloys		

MANUAL ACTUATION

Parts for all valve grades	
Upper spindle	Brass
Handle	Aluminium
All others	Stainless Steel 316L

PNEUMATIC ACTUATION

Parts	
Actuator Body	Aluminium / SS
Piston	Brass / Aluminium / Stianless steel
O-ring	NBR
All others	Stainless Steel 316 L

PRODUCT CONFIGURATOR

	Valve series, Surface Finish		Valve Actuation		Valve Configurations		Body Material (others on request)		Seat Material		End Connection		Options	
M8SI	**S**		**BPNF**		**2V1**		**I**		**K**		**A/B: B⅜**			
	Ra 0.25 µm EP (10 µin Ra)-316 L VAR	**V**	Multi-Turn Handwheel (20bar)	**LM**	2 ports in line	**2V1**	AISI 316L	**I**	PCTFE (Kel-F®)	**K**	Metal face seal ⅜" - Female	**V⅜-F**	Panel Mounting (LQ only)	**FT**
	Ra 0.4 µm (15 µin Ra)-316 L low sulf.	**S**	Pneumatically actuated (10bar)	**BPNF BPNO**	3 ports T configuration	**3V4**	Hastelloy® On request	**H**			Metal face seal ⅜" - Male non swiel	**V⅜-M**		
	Ra 0,18 µm EP (7 µin Ra)	**U**	Quarter-Turn Handwheel (20bar)	**LQ**			SS VAR On request	**A**			BWO ⅜" (Orbital Weld)	**B⅜**		
											BWO ½" (Orbital Weld)	**B½**		
											BWO 10 mm (Orbital Weld)	**B 10**		
											BWO 12 mm (Orbital Weld)	**B 12**		
											Others on request			

ALL RIGHTS OF CHANGE RESERVED

M12 | DIAPHRAGM VALVE FOR UHP APPLICATIONS

Feature a unique proven design

M12 - PP2

KEY FEATURES

- Tied diaphragm design for positive seat opening and closing
- Individual serial number for full traceability
- Assembly, testing and packaging in cleanroom class 10
- Easy purgeability (optional purge ports, up/down stream)
- Excellent flow coefficient
- Metal to Metal sealing to atmosphere
- 3 ports option

DIMENSIONS

M12-PP2

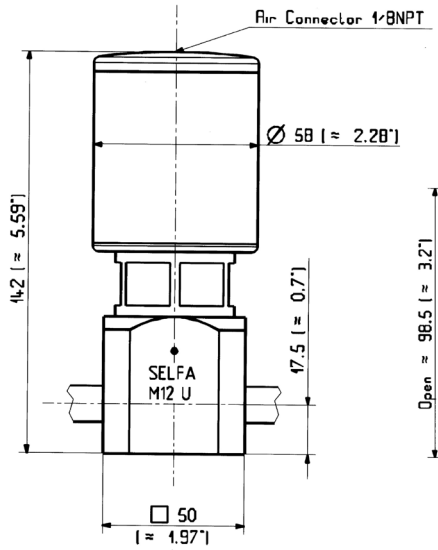

M12-MT

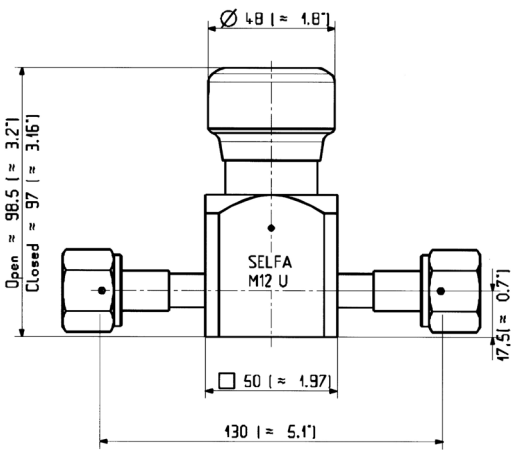

M12-BOTTOM VIEW

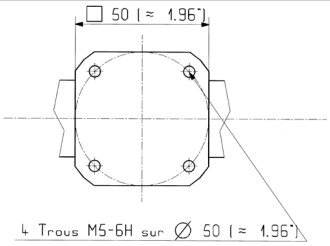

ALL RIGHTS OF CHANGE RESERVED

SPECIFICATIONS

Fluid Media	High purity and UHP, corrosive and non-corrosive gases
Max. working pressure	• **M12 MT manual:** 15 bar (215psi) • **M12 PP2 pneumatic:** 15 bar (215psi)
Actuator operating pressure	5 to 7 bar (75 to 105 psi)

Temperature range	-20°C to + 65°C (-4°F to 176°F) standard
Flow coefficient	CV = 1,75
Certified max. Helium inboard leak rate (at max. pressure)	< 10^{-9} mbar.l/sec
Certified max. Helium outboard leak rate (at max. pressure)	< 10^{-9} mbar.l/sec

Certified max. Helium across the seat (at max. pressure)	< 1.10^{-9} mbar.l/sec
Nominal seat Diameter	12 mm (0,47")

CONSTRUCTION MATERIAL

		Valve Grade & Materials		
	Parts	**S**	**V**	**U**
Wetted parts	Body	Stainless Steel 316L		
	Surface Finish	< 0,4 µm non EP (15 µ in Ra)	< 0,25 µm EP (10 µ in Ra)	< 0,18 µm EP (7 µ in Ra)
	Diaphragm	Phynox		
	Seat Material	PCTFE (Kel-F®) / PVDF or Vespel® (on request)		
Non-wetted parts	Backup diaphragms	Phynox		
	All others	Stainless steel or alloys		

MANUAL ACTUATION

Parts for all valve grades	
Handle	Aluminium
All others	Stainless Steel or Alloys

PNEUMATIC ACTUATION

Parts	
O-ring	NBR
Actuator Body	Aluminium

PRODUCT CONFIGURATOR

	Valve series		Valve Actuation		Valve Configurations		Body Material (others on request)		Seat Material		End connections (IN/OUT)		Options	
M12	**S**		**MT**		**2V1**		**I**		**K**		**A/B: B½**		**FP**	
	UHP - Ra 0.18 µm Ep. (7 µin Ra)	**U**	Multi-Turn Handwheel	**MT**	2 ports in line	**2V1**	316 L	**I**	PCTFE (Kel-F®)	**K**	Metal face seal ½" - Female	**V½-F**	Back Mounting	**FP**
	HP/UHP - Ra 0.25 µm Ep. (10 µin Ra)	**V**	Pneumatically actuated (Normally closed version)	**PP2**	2 Ports in line, upstream purge port - left side	**2VPEG**	Hastelloy® (on request)	**H**	PI (Vespel®)	**V**	Metal face seal ½" - Male	**V½-M**	Electric Limit Switch (PP2 actuators)	**CI**
	HP Version - Ra 0.4 µm non EP (15 µin Ra)	**S**	PP2 Normally open version	**PP2 NO**	2 Ports in line, downstream purge port - left side	**2VPSG**			PVDF	**P**	BWO ½" - (Butt Orbital Weld)	**B ½**		
			PP2 Normally closed version	**PP2 NC**	2 Ports in line, 2 purge ports upstream/ downstream/left side	**2V1P2**					BWO ¾" (Butt Orbital Weld)	**B ¾**		
					2 ports in line, full passage, downstream branch ("Tee"Valve)	**3VT**								
					2 ports in line, full passage, downstream branch, downstream purge port	**3VTPS**								

ALL RIGHTS OF CHANGE RESERVED

M20 | DIAPHRAGM VALVES FOR UHP APPLICATIONS

Feature a unique proven design

KEY FEATURES

- Tied diaphragm design for positive seat opening and closing
- Individual serial number for full traceability
- Assembling, testing and packaging in cleanroom class 10
- Easy purgeability (optional purge ports, up/down stream)
- Excellent flow coefficient
- Metal to Metal sealing to atmosphere
- 3 ports option

DIMENSIONS

M20-PP2

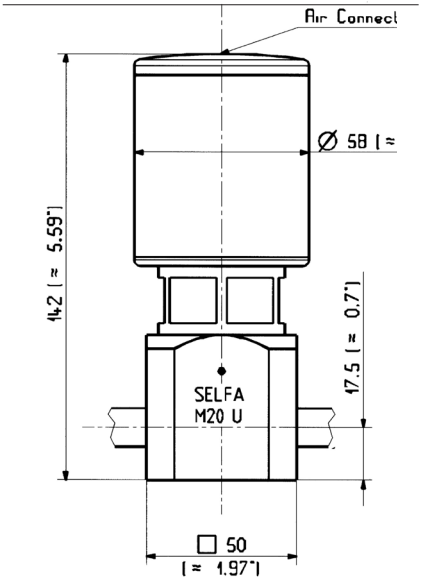

M20-MT

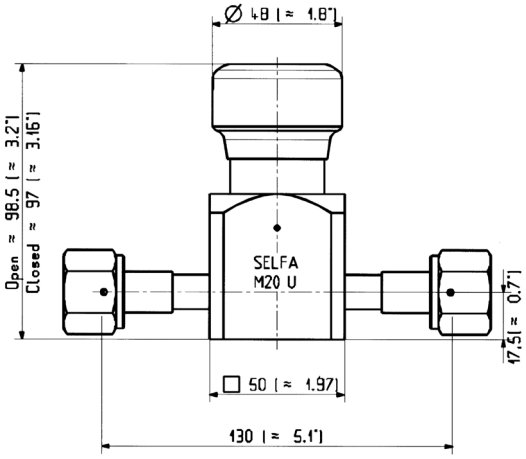

M20-BOTTOM VIEW

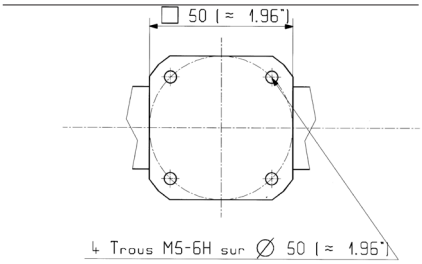

ALL RIGHTS OF CHANGE RESERVED

SPECIFICATIONS

Fluid Media	High purity and UHP, corrosive and non-corrosive gases
Max. working pressure	• **M20 MT manual:** 15 bar (215psi) • **M20 PP2 pneumatic:** 15 bar (215psi)
Min. operating pressure	Vaccum (for manual only)
Actuator opening pressure	5 to 7 bar (75 to 105 psi)

Temperature range	-20°C to + 65°C (-4°F to 176°F) standard
Flow coefficient	CV = 3,5
Certified max. Helium inboard leak rate (at max. pressure)	< 10^{-9} mbar.l/sec
Certified max. Helium outboard leak rate (at max. pressure)	< 10^{-9} mbar.l/sec

Certified max. Helium across the seat (at max. pressure)	< 1.10^{-9} mbar.l/sec
Nominal seat Diameter	20 mm (0,79")

CONSTRUCTION MATERIAL

		Valve Grade & Materials		
	Parts	**S**	**V**	**U**
Wetted parts	Body	Stainless Steel 316L		
	Surface Finish	< 0,4 µm non EP (15 µ in Ra)	< 0,25 µm EP (10 µ in Ra)	< 0,18 µm EP (7 µ in Ra)
	Diaphragm	Elgiloy®		
	Seat Material	PCTFE (Kel-F®) / PVDF or Vespel® (on request)		
Non-wetted parts	Backup diaphragms	Phynox®		
	All others	Stainless steel or alloys		

MANUAL ACTUATION

Parts for all valve grades	
Handle	Aluminium
All others	Stainless Steel or Alloys

PNEUMATIC ACTUATION

Parts	
O-ring	NBR
Actuator Body	Aluminium

PRODUCT CONFIGURATOR

	Valve series		Valve Actuation		Valve Configurations		Body Material (others on request)		Seat Material		End connections (IN/OUT)		Options	
M20	**S**		**MT**		**2V1**		**I**		**K**		**A/B: B¾**		**FT**	
	UHP - Ra 0.18 µm Ep. (7 µin Ra)	**U**	Multi-Turn Handwheel	**MT**	2 ports in line	**2V1**	316L	**I**	PCTFE (Kel-F®)	**K**	Metal face seal ¾" - Female	**V ¾-F**	Back Mounting	**FP**
	HP/UHP - Ra 0.25 µm Ep. (10 µin Ra)	**V**	Pneumatically actuated (Normally closed version)	**PP2**	2 Ports in line, upstream purge port - left side	**2VPEG**	Hastelloy® (on request)	**H**	PI (Vespel®)	**V**	Metal face seal ¾" - Male	**V ¾-M**	Electric Limit Switch (PP2 actuators)	**CI**
	HP Version - Ra 0.4 µm non EP (15 µin Ra)	**S**	PP2 Normally open version	**PP2 NO**	2 Ports in line, downstream purge port - left side	**2VPSG**			PVDF	**P**	BWO ¾" (Butt Orbital Weld)	**B ¾**		
			PP2 Normally closed version	**PP2 NC**	2 Ports in line, 2 purge ports upstream/downstream/ left side For "Tee" configurations please refer to M12	**2V1P2**					BWO 1" (Butt Orbital Weld)	**B 1**		
											Metal face seal 1"- Male	**V1-M**		

ALL RIGHTS OF CHANGE RESERVED

SIR 100 | DIAPHRAGM PRESSURE REGULATOR FOR UHP APPLICATIONS

The SIR 100 Regulator was created in response to the industry's needs for a low pressure non tied diaphragm regulator for specialty source gas service, i.e. gas cabinets. The design and material of construction, plus some unique features make it an ideal choice for gas source applications with the reactive and hazardous gases the Semiconductor and Allied Industries use.

- KEY FEATURES

- Individual Serial number, for full traceability
- Ergonomic Design
- Spherical ball for ultra smooth control
- Metal to metal seal to atmosphere
- Minimal wetted surfaces for optimal purging
- Gas specific solutions (Body and seat materials)
- Assembling, testing & Packaging in cleanroom Cl. 10
- Controlled (PC) electropolishing for better corrosion resistance
- 2,3,4,5, or 6 ports options available
- Diaphragm counter balance springs
- Excellent response at low pressures (droop, hysteresis, creep)

DIMENSIONS

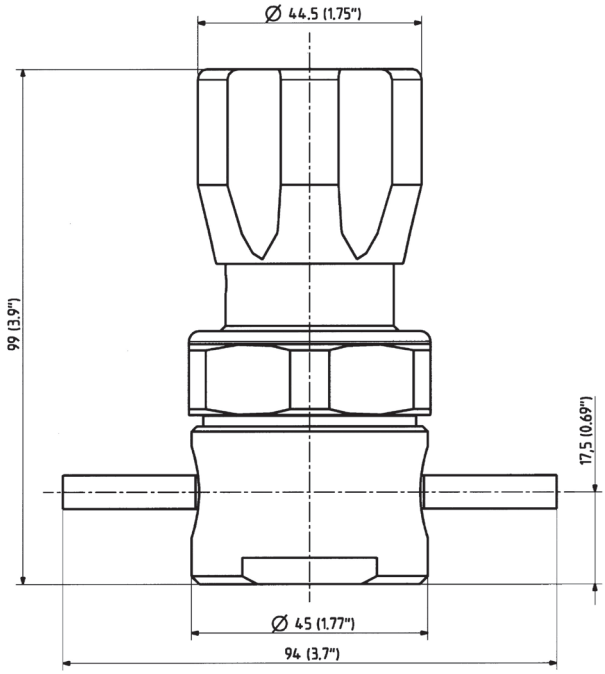

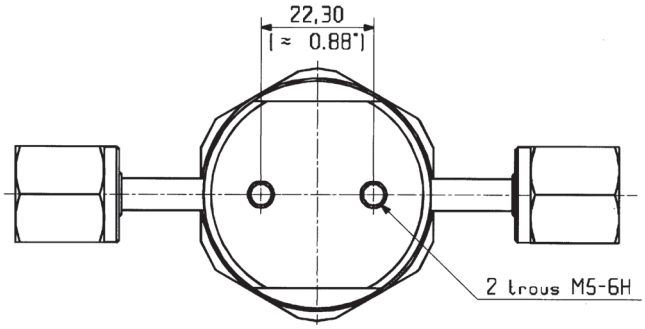

ALL RIGHTS OF CHANGE RESERVED

SPECIFICATIONS

Fluid Media	Standard, HP, UHP, corrosive and non-corrosive gases	**Temperature range**	-20°C to + 65°C (-4°F to 150°F)	**Certified max. Helium outboard leak rate (at max. pressure)**	< 1.10^{-9} mbar.l/sec
Inlet pressure	50 bar (725 PSI)	**Flow coefficient**	CV = 0.2	**Certified max. Helium across the seat leak rate (at max. pressure)**	< 1.10^{-9} mbar.l/sec
Outlet pressure	2 - 4 -7 bar (30 - 60 - 100 PSI)	**Certified max. Helium inboard leak rate**	< 1.10^{-9} mbar.l/sec	**Number of ports**	2, 3, 4, 5 or 6

CONSTRUCTION MATERIAL

	Parts	Material
Wetted parts	Body	AISI 316L, VAR
	Diaphragm	Hastelloy®
	Seat	PCTFE (Kel-F®) / PI (Vespel®) /PVDF
	Poppet	AISI 316L, VAR
Non-wetted parts	Bonnet	Nickel Plated Brass
	Handle	Extruded Plastic
	Others	Stainless Steel or alloys

SURFACE FINISH

U	V	S
< Ra 0.18µm Ep. (7µin Ra)	< Ra 0,25µm Ep. (10µin Ra)	< Ra 0,4µm nonEP(15µin Ra)

FLOW CURVES

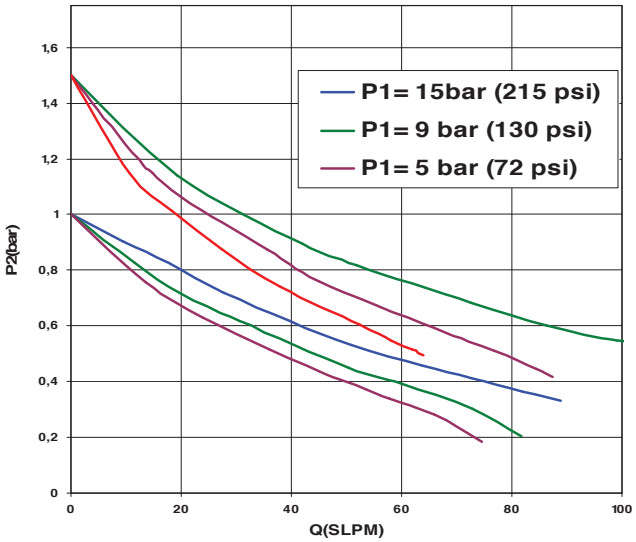

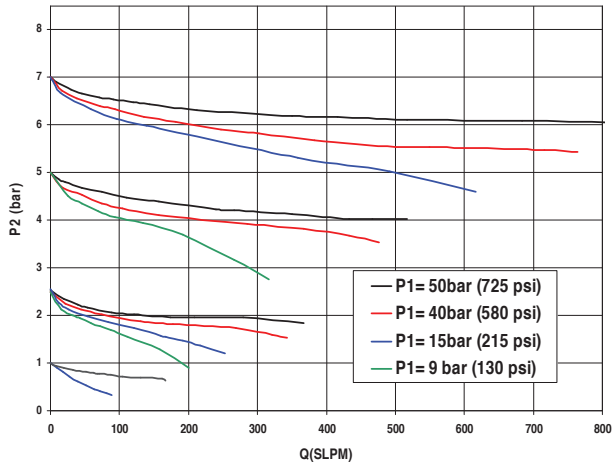

PRODUCT CONFIGURATOR

		Series & Surface Finish		Port Configurations		Body material (others on request)		Seat Material		Outlet regulated Pressure		End Connection	
SIR	**100**	**U**		**2V1**		**A**		**K**		**7b**		**A/B: V¼M**	
		Ra 0.18µm EP (7µin Ra)	**U**	2 ports in line	**2V1**	AISI 316L, VAR	**A**	PCTFE (Kel-F®)	**K**	2 bar - 30 psig	**2b**	Metal face seal ¼" - Female	**V¼-F**
		Ra 0.25µm EP (10µin Ra)	**V**			AISI 316L	**I**	PI (Vespel®)	**V**	4 bar - 60 psig	**4b**	Metal face seal ¼" - Male	**V¼-M**
		Ra 0.4µm non Ep. (15µin Ra)	**S**			Hastelloy®	**H**	PVDF	**P**	7 bar - 100 psig	**7b**	Metal face seal ¼" - Internal	**V¼-FI**
												BWO ¼" - Standard (Orbital Weld)	**B¼**
												BWO 6 mm (Orbital Weld)	**B6**
												¼ NPT - Inlet threads	**NPT FI**

ALL RIGHTS OF CHANGE RESERVED

SIR 200 | DIAPHRAGM PRESSURE REGULATOR FOR UHP APPLICATIONS

The SIR 200 Regulator was created in response to the industry's needs for a high pressure non tied diaphragm regulator for specialty source gas service, i.e. gas cabinets. The design and material of construction, plus some unique features make it an ideal choice for gas source applications with the reactive and hazardous gases the Semiconductor and Allied Industries use.

KEY FEATURES

- Individual Serial number, for full traceability
- Ergonomic Design
- Spherical ball for ultra smooth control
- Metal to metal seal to atmosphere
- Minimal wetted surfaces for optimal purging
- Gas specific solutions (Body and seat materials)
- Assembling, testing & Packaging in cleanroom Cl. 10
- Controlled (PC) electropolishing for better corrosion resistance
- 2,3,4,5, or 6 ports options available
- Diaphragm counter balance springs
- Excellent response at low pressures (droop, hysteresis, creep)

*RIGHTS OF CHANGE RESERVED FOR PICTURE

DIMENSIONS

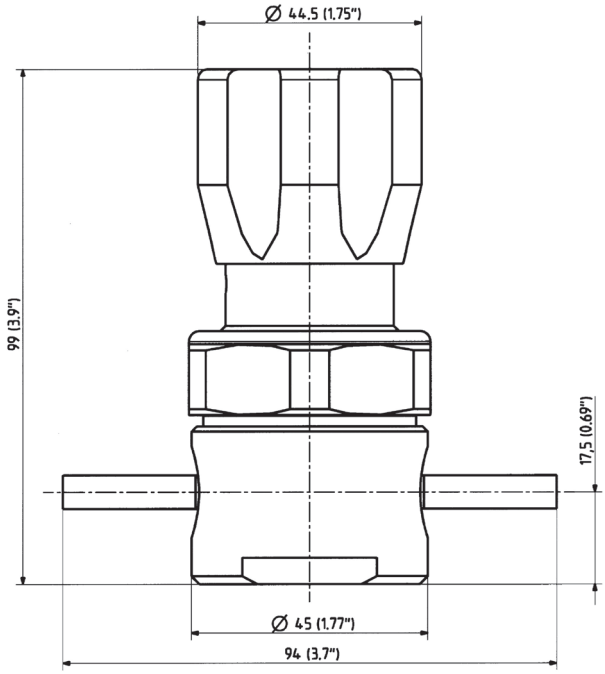

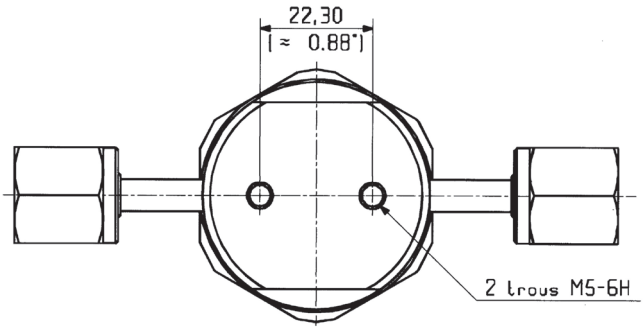

ALL RIGHTS OF CHANGE RESERVED

SPECIFICATIONS

Fluid Media	Standard, HP, UHP, corrosive and non-corrosive gases	**Temperature range**	-20°C to + 65°C (-4°F to 150°F)	**Certified max. Helium outboard leak rate (at max. pressure)**	< 1.10^{-9} mbar.l/sec
Inlet pressure	200 bar (2900 PSI)	**Flow coefficient**	CV = 0.2	**Certified max. Helium across the seat leak rate (at max. pressure)**	< 1.10^{-9} mbar.l/sec
Outlet pressure	2 - 4 -7 bar (30 - 60 - 100 PSI)	**Certified max. Helium inboard leak rate**	< 1.10^{-9} mbar.l/sec	**Number of ports**	2, 3, 4, 5 or 6

CONSTRUCTION MATERIAL

	Parts	Material
Wetted parts	Body	AISI 316L, VAR
	Diaphragm	Hastelloy®
	Seat	PCTFE (Kel-F®) / PI (Vespel®) /PVDF
	Poppet	AISI 316L, VAR
Non-wetted parts	Bonnet	Nickel Plated Brass
	Handle	Extruded Plastic
	Others	Stainless Steel or alloys

SURFACE FINISH

U	V	S
< Ra 0.18µm Ep. (7µin Ra)	< Ra 0,25µm Ep. (10µin Ra)	< Ra 0,4µm nonEP(15µin Ra)

FLOW CURVES

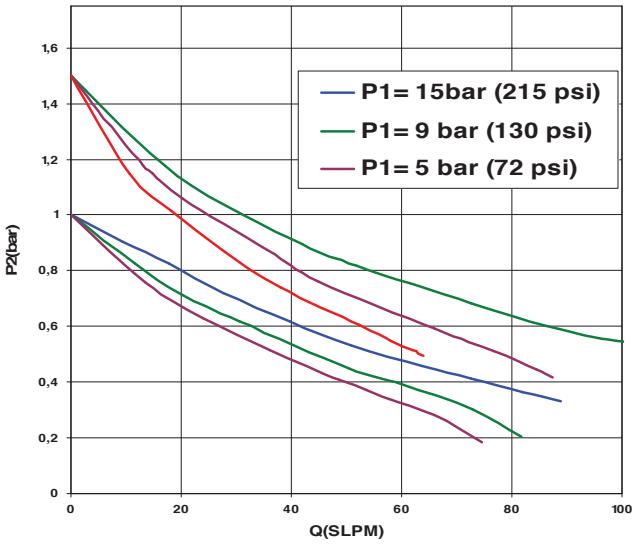

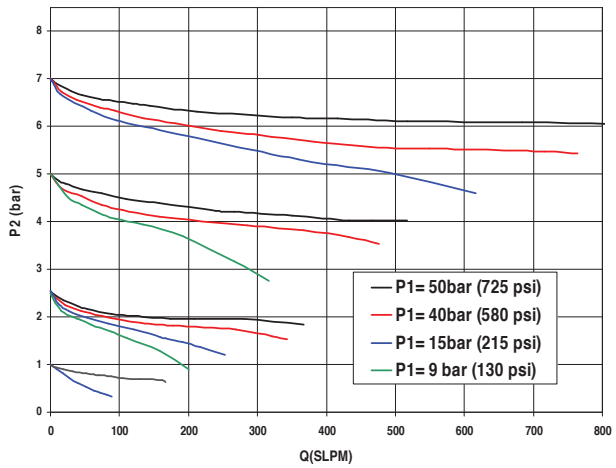

PRODUCT CONFIGURATOR

		Series & Surface Finish		Port Configurations		Body material (others on request)		Seat Material		Outlet regulated Pressure		End Connection	
SIR	200	S		2V1		A		K		7b		A/B: V¼M	
		Ra 0.18µm Ep. (7µin Ra)	U	2 ports in line	2V1	AISI 316L, VAR	A	PCTFE (Kel-F®)	K	2 bar - 30 psig	2b	Metal face seal ¼" - Female	V¼-F
		Ra 0.25µm Ep. (10µin Ra)	V		3V1	AISI 316L	I	PI (Vespel®)	V	4 bar - 60 psig	4b	Metal face seal ¼" - Male	V¼-M
		Ra 0.4µm non Ep. (15µin Ra)	S		3V4	Hastelloy®	H	PVDF	P	7 bar - 100 psig Inlet: >240 bar >3500 psig	7b	Metal face seal ¼" - Internal	V¼-FI
												BWO ¼" - Standard (Orbital Weld)	B¼
												BWO 6 mm (Orbital Weld)	B6
												¼" NPT - Inlet threads	NPT FI

ALL RIGHTS OF CHANGE RESERVED

SI 220 | DIAPHRAGM PRESSURE REGULATOR FOR HP & UHP APPLICATIONS

The SI 220 Regulator was created in response to the industry's need for a Highflow, High Pressure, Springless, Tied Diaphragm Regulator for specialty source gas service, i.e. gas cabinets. The design and materials of construction, plus some unique features make it an ideal choice for gas source applications with reactive and hazardous gases the Semiconductor and Allied Industries use.

APPLICATIONS

- Tied diaphragm design
- Springless design
- Unique features include a special leak test port that enables the diaphragm seal to be outboard leak tested ‹10-9 mbar.l/sec range at high pressure.
- Precise control of the gas discharge with minimum deviation caused by the supply pressure effect.
- Counter balance springs outside the gas stream to ensure the unit functions correctly with downstream vacuum and upstream high pressure
- A unique spherical ball pressure pad to give ultra smooth delivery pressure adjustment
- Choice of delivery pressure: 3, 8, 10, 15, 25 or 50 bar / 45, 116, 145, 217, 365 or 725 psi

KEY FEATURES

- Individual Serial number, for full traceability
- Ergonomic Design
- Spherical ball for ultra smooth control
- Metal to metal seal to Atmosphere
- Sealed bonnet for extra protection
- Minimal wetted surfaces for optimal purging
- Gas specific solutions (Body and Seat Materials)
- Assembling, testing & Packaging in cleanroom Cl. 10
- Controlled (PC) electropolishing for better corrosion resistance
- No spring in the wetted area for zero particle emission
- 2,3,4 or 6 ports options available
- Diaphragm counter balance springs
- Excellent response at high and low pressures (droop, hysteresis, creep)

DIMENSIONS

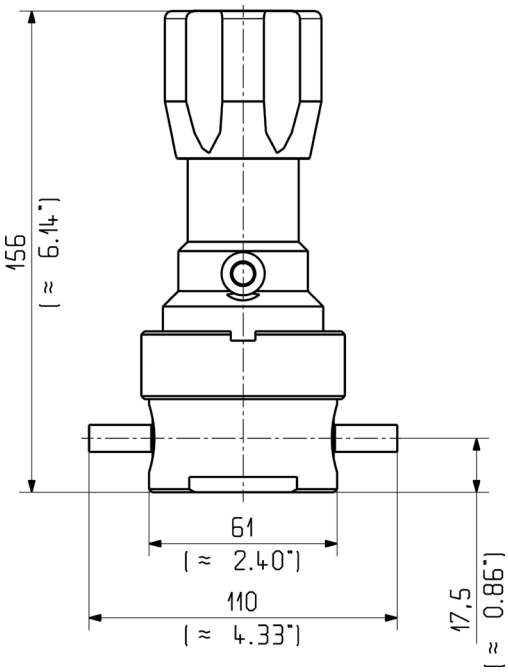

ALL RIGHTS OF CHANGE RESERVED

SPECIFICATIONS

Fluid Media	Standard, High and Ultra High Purity, corrosive and non-corrosive gases	**Temperature range**	-20°C to + 60°C (-2F to 140F)	**Certified max. Helium outboard leak rate (at max. pressure)**	< 1.10^{-9} mbar.l/sec
Inlet pressure	240 bar (3500 PSI)	**Nomnal flow**	170 slpm (N_2)	**Certified max. Helium across the seat leak rate (at max. pressure)**	< 1.10^{-9} mbar.l/sec
Outlet pressure	3 - 8 - 10 - 15 - 25 - 50 bar (45-116-145-217-365-725 PSI)	**Flow Coefficient (Cv)**	CV = 0,2	**Number of ports**	2, 3, 4, 5 or 6
		Certified max. Helium inboard leak rate	< 1.10^{-9} mbar.l/sec		

CONSTRUCTION MATERIAL

	Parts	Material
Wetted parts	Body	AISI 316L, VAR, Hastelloy®
	Diaphragm	Hastelloy®
	Seat	PCTFE (Kel-F®)
	Poppet	AISI 316L, VAR, Hastelloy®
Non-wetted parts	Bonnet	Nickel Plated Brass
	Handle	Extruded Plastic
	Others	Stainless Steel or others

SURFACE FINISH

U	V	S
< Ra 0,18µm Ep. (7µin Ra)	< Ra 0,25µm Ep. (10µin Ra)	< Ra 0,4µm nonEP(15µin Ra)

FLOW CURVES

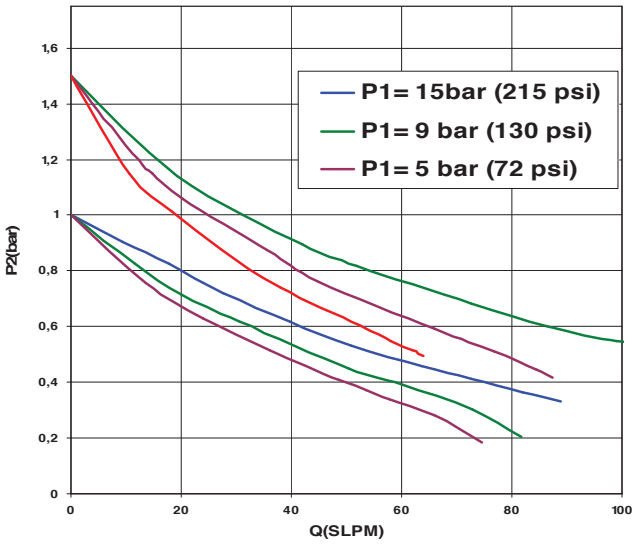

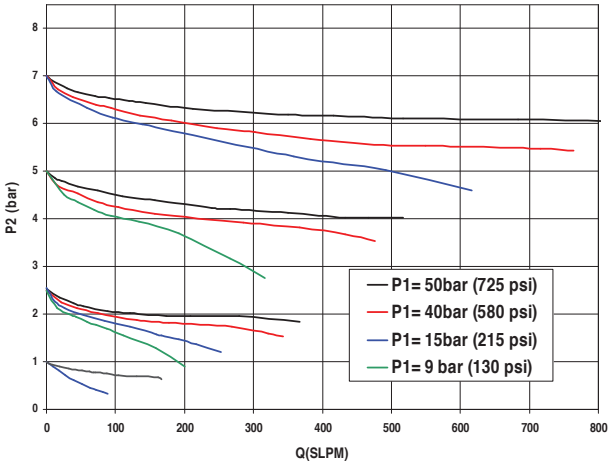

		Series & Surface Finish		Port Configurations		Body material (other son request)		Seat Material		Outlet regulated Pressure		End Connection	
SI	**220**	**S**		**2V1**		**A**		**K**		**10b**		**A/B: V⅜ F**	
		Ra 0,18µm Ep. (7µin Ra)	**U**	2 ports in line	**2V1**	AISI 316L, VAR	**A**	PCTFE (Kel-F®)	**K**	3 bar 45 psi	**3b**	Metal face seal ¼" - Female	**V ¼-F**
		Ra 0,25µm Ep. (10µin Ra)	**V**		**3V1**	AISI 316L	**I**			8 bar 116 psi	**8b**	Metal face seal ⅜" - Female	**V ⅜-F**
		Ra 0,4µm nonEP(15µin Ra)	**S**		**3V4**	Hastelloy®	**H**			10 bar 145 psi	**10b**	Metal face seal ¼" - Male	**V ¼-M**
										15 bar 217 psi	**15b**	Metal face seal ⅜" - Male	**V ⅜-M**
										25 bar 365 psi	**25b**	Metal face seal ¼" - Internal Female	**V -FI**
										50 bar 725 psi Intlet: 240 bar 3500psi	**50b**		

ALL RIGHTS OF CHANGE RESERVED

SI 240 | DIAPHRAGM PRESSURE REGULATOR FOR HP & UHP APPLICATIONS

The SI 240 Regulator was created in response to the industry's need for a Highflow, High Pressure, Springless, Tied Diaphragm Regulator for specialty source gas service, i.e. gas cabinets. The design and materials of construction, plus some unique features make it an ideal choice for gas source applications with reactive and hazardous gases the Semiconductor and Allied Industries use.

APPLICATIONS

- Tied diaphragm design
- Springless design
- Unique features include a special leak test port that enables the diaphragm seal to be outboard leak tested ‹10-9 mbar.l/sec range at high pressure.
- Precise control of the gas discharge with minimum deviation caused by the supply pressure effect.
- Counter balance springs outside the gas stream to ensure the unit functions correctly with downstream vacuum and upstream high pressure
- A unique spherical ball pressure pad to give ultra smooth delivery pressure adjustment
- Choice of delivery pressure: 3, 8, 10, 15, 25 or 50 bar / 45, 116, 145, 217, 365 or 725 psi

KEY FEATURES

- Individual Serial number, for full traceability
- Ergonomic Design
- Spherical ball for ultra smooth control
- Metal to metal seal to Atmosphere
- Sealed bonnet for extra protection
- Minimal wetted surfaces for optimal purging
- Gas specific solutions (Body and Seat Materials)
- Assembling, testing & Packaging in cleanroom Cl. 10
- Controlled (PC) electropolishing for better corrosion resistance
- No spring in the wetted area for zero particle emission
- 2,3,4 or 6 ports options available
- Diaphragm counter balance springs
- Excellent response at high and low pressures (droop, hysteresis, creep)

DIMENSIONS

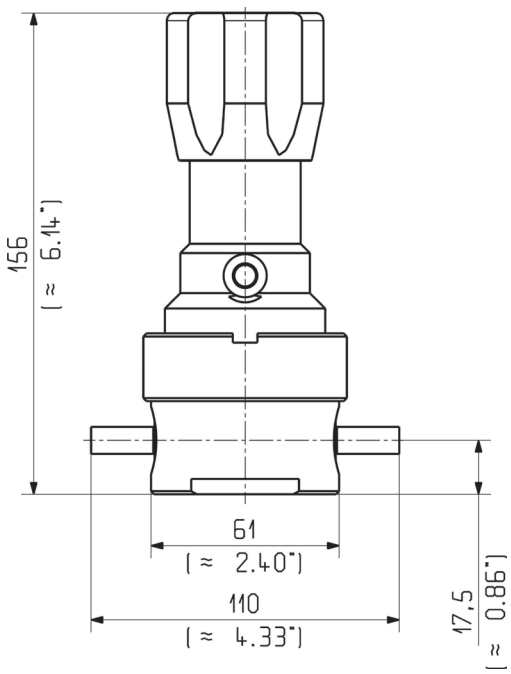

ALL RIGHTS OF CHANGE RESERVED

SPECIFICATIONS

Fluid Media	Standard, High and Ultra High Purity, corrosive and non-corrosive gases	**Temperature range**	-20°C to + 60°C (-2F to 140F)	**Certified max. Helium outboard leak rate (at max. pressure)**	< 1.10^{-9} mbar.l/sec
Inlet pressure	240 bar (3500 PSI)	**Nomnal flow**	150 slpm (N_2)	**Certified max. Helium across the seat leak rate (at max. pressure)**	< 1.10^{-9} mbar.l/sec
Outlet pressure	2 - 4 - 7 bar (29 - 58 - 101 PSI)	**Flow Coefficient (Cv)**	CV = 0,09	**Number of ports**	2, 3, 4, 5 or 6
		Certified max. Helium inboard leak rate	< 1.10^{-9} mbar.l/sec		

CONSTRUCTION MATERIAL

	Parts	Material
Wetted parts	Body	AISI 316L, VAR, Hastelloy®
	Diaphragm	Hastelloy®
	Seat	PCTFE (Kel-F®)
	Poppet	AISI 316L, VAR, Hastelloy®
Non-wetted parts	Bonnet	Nickel Plated Brass
	Handle	Extruded Plastic
	Others	Stainless Steel or others

SURFACE FINISH

U	V	S
< Ra 0,18µm Ep. (7µin Ra)	< Ra 0,25µm Ep. (10µin Ra)	< Ra 0,4µm nonEP(15µin Ra)

FLOW CURVES

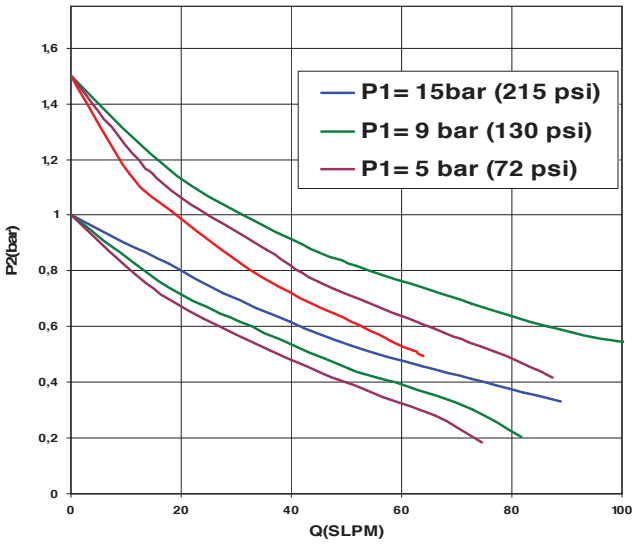

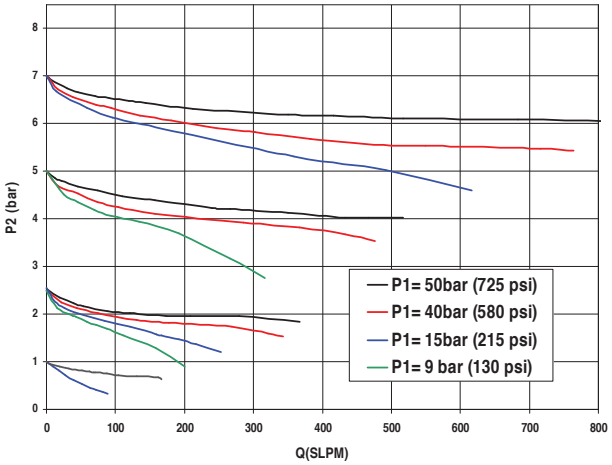

PRODUCT CONFIGURATOR

		Series & Surface Finish		Port Configurations		Body material (other son request)		Seat Material		Outlet regulated Pressure		End Connection	
SI	240	S		2V1		A		K		4b		A/B: V⅜ F	
		Ra 0,18µm Ep. (7µin Ra)	U	2 ports in line	2V1	AISI 316L, VAR	A	PCTFE (Kel-F®)	K	1 bar 29 psi	2b	Metal face seal ¼" - Female	V ¼-F
		Ra 0,25µm Ep. (10µin Ra)	V		3V1	AISI 316L	I			4 bar 58 psi	4b	Metal face seal ⅜" - Female	V ⅜-F
		Ra 0,4µm nonEP(15µin Ra)	S		3V4	Hastelloy®	H			7 bar 101 psi	7b	Metal face seal ¼" - Male	V ¼-M
												Metal face seal ⅜" - Male	V ⅜-M
												Metal face seal ¼" - Internal Female	V -FI

ALL RIGHTS OF CHANGE RESERVED

VALVES | OTHERS PRODUCTS ON REQUEST

M4.1

M4.1 VB

M8.1 VB

SUPPRA VALVES / HP9000 / K900

VALVES CONFIGURATIONS ON REQUEST

2V1

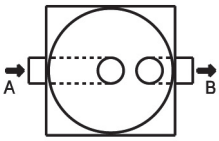

2V2

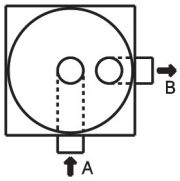

3V4

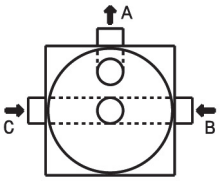

3V5

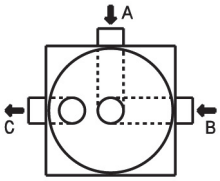

4V10

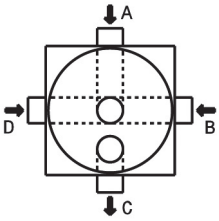

*Other configuration on request

REGULATORS | OTHERS PRODUCTS ON REQUEST

SI 260

ALL RIGHTS OF CHANGE RESERVED

ROTAREX
VALVES - FITTINGS - REGULATORS

A WORLD OF GAS CONTROL SOLUTIONS

INDUSTRIAL
CYLINDER VALVES

UHP
CYLINDER VALVES

MEDICAL VALVES
& REGULATORS

SPECIALTY GAS VALVES
REGULATORS & FITTINGS

CRYOGENIC VALVES

AUTOMOTIVE

FIRE SUPPRESSION

LPG VALVES
REGULATORS & GAUGES

WATERTEC

AUSTRALIA / BRASIL / CHINA / FRANCE / INDIA / ITALY / JAPAN / LUXEMBOURG / MIDDLE EAST / RUSSIA / SINGAPORE / SPAIN / THAILAND / USA

ROTAREX
VALVES - FITTINGS - REGULATORS

www.rotarex.com

FLOWTEKNIK
SCANDINAVIA APS

Rugvænget 19 C
2630 Taastrup
info@pgflowteknik.dk
www.pgflowteknik.dk

WORLDWIDE HEADQUARTERS

ROTAREX S.A.
24, rue de Diekirch, BP 19
L-7505 Lintgen
Luxembourg
Tel.: +352 32 78 32-1
Fax: +352 32 78 32-854
E-mail: info@rotarex.com

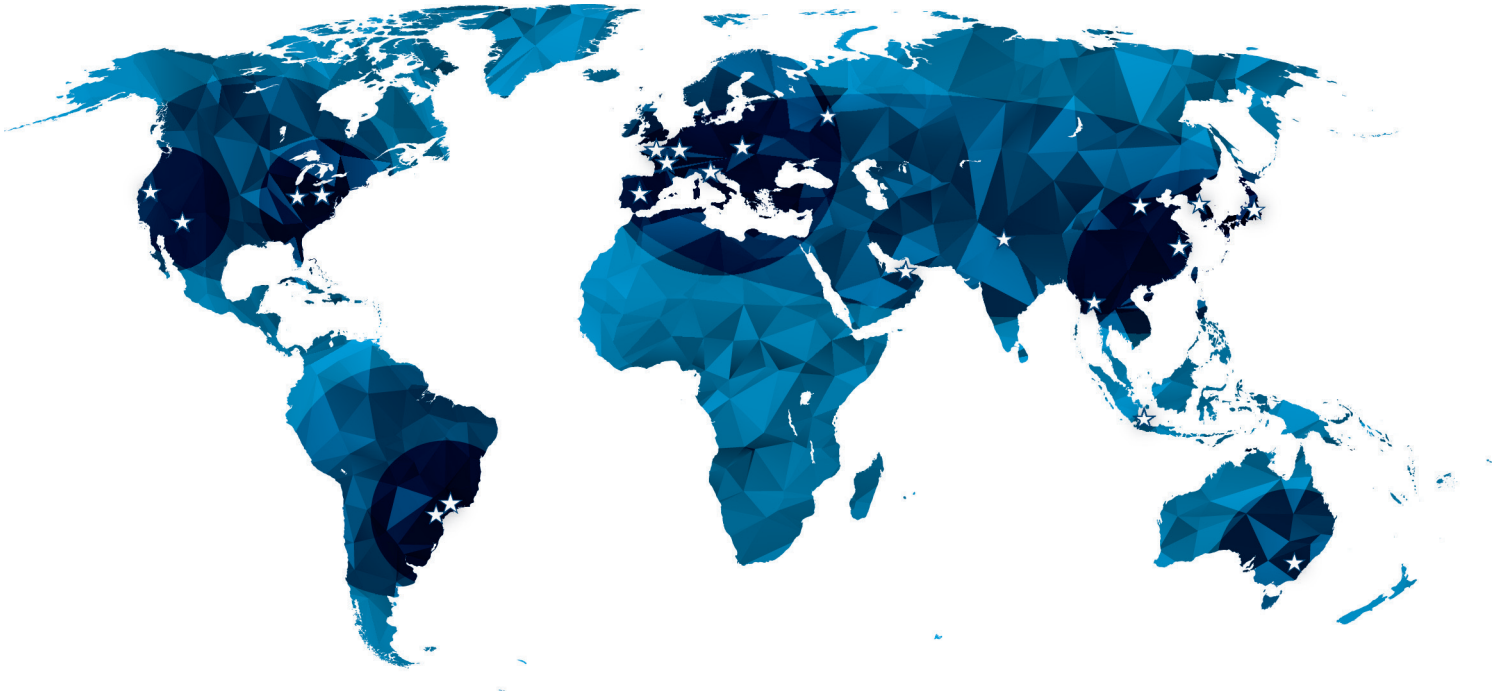

REGIONAL / COUNTRY HEAD QUARTERS

NORTH AMERICA

USA
Rotarex North America
221 Westec Drive
Westmoreland Technology Park I
Mt. Pleasant, Pennsylvania 15666 USA
Tel.: +1 724-696-43 40
Fax: +1 724-696-43 64
E-mail: info@northamerica.rotarex.com

SOUTH AMERICA

BRASIL
Rotarex Brazil Ltda
Cond. Ind. Portal da Anhanguera Estr.
Municipal Gov. Mário Covas, S/N
13279-411 Bairro Macuco -Valinhos
São Paulo Brazil
Tel.: +55 19 3518 0800
Fax: +55 19 3869-1503
E-mail: info@brazil.rotarex.com

EUROPE

FRANCE, BENELUX, GERMANY
24, rue de Diekirch, BP 19
L-7505 Lintgen, Luxembourg
Tel.: +352 32 78 32-1
Fax: +352 32 78 32 317
E-mail: salesequipment@rotarex.com

ITALY
Rotarex Italia S.r.l.
46 Via Giacomo Matteotti
I-25080, Ciliverghe di Mazzano (BS) Italy
Tel.: +39 030 212 05 50
Fax: +39 030 212 23 62
E-mail: info@italia.rotarex.com

SPAIN
Rotarex Spain
C/Alcala, 4° Oficina 404
28014 Madrid
Tel.: +34 (91) 570 89 05
Mobile: + 34 (650) 908 856
E-mail: info@spain.rotarex.com

RUSSIA
Rotarex Rus
Tverskaya street, 20/1 bldg. 1 of 506
125009, Moscow Russia
Tel.: +7 985 125 7776
Skype: rotarexrus
E-mail: info-russia@rotarex.com

POLAND
Rotarex Polska
13 Gröbli
PL 49-300 Brzeg, Poland
Tel.: +48 77 416 40 16
Fax: +48 77 416 20 99
E-mail: info@poland.rotarex.com

ASIA

MIDDLE EAST
Rotarex Middle East
Jebel Ali Free Zone - Lob 17, Office 415
P.O. Box 261749
Dubai, U.A.E.
Tel.: +971 (0) 4 887 6701
Fax: +971 (0) 4 887 6702
E-mail: info@middle-east.rotarex.com

CHINA
Rotarex Star
60 Yuan Zhong Road
Shanghai Nanhui Industrial Zone
201300, Shanghai China
Tel.: +86-21 5800 4000
Fax: +86-21 5800 3226
E-mail: info@china.rotarex.com

SINGAPORE
Rotarex Fareast Pte Ltd
10 Ubi Crescent
Ubi Techpark, Lobby C, #06-55
408564 Singapore
Tel.: +65 64 72 37 27
Fax: +65 64 72 45 28
E-mail: info@singapore.rotarex.com

JAPAN
Rotarex Japan Ltd
6F, Yawaragi Bldg., 1-27-11 Taito
Taito-ku, Tokyo
110-0016 JAPAN
Tel.: +81 3 5817 8108
Mob.: +81 80 3755 2539
Fax: +81 3 5817 8168
E-mail: info@japan.rotarex.com

INDIA
Rotarex ENGG. PVT. LTD.
C-105, Mahindra Apartments
Vikaspuri, New Delhi 110018
mob.: +91-9873467666
E-mail: atul.nigam@rotarex.in

THAILAND
Rotarex (Thailand) Co Ltd.
297, Wanglee Tower
3rd floor, Unit C, Surawong Road
Suriyawong, Bangrak,
Bangkok 10500 Thailand
Tel.: +66 2635 71 79
E-mail: info@thailand.rotarex.com

SOUTH KOREA
Rotarex Luz Tech Co.
305-500, 547 Yongsan-dong
Yuseong-gu
Taejon, Korea
Tel.: +82 42 825 8911
Fax: +82 42 825 8913
E-mail: info@rotarex.co.kr

OCEANIA

AUSTRALIA
Rotarex Australia/New Zealand
Hornsby Heights,
Sydney, NSW, 2077
Tel.: +61 477 477 481
E-mail: info@australia.rotarex.com

© 2012 - ROTAREX S.A.
ROTAREX Equipment™ ROTAREX S.A.
UHP-EN-0415